The Implementation of Controlled Humanoid Robot with Android

Ahmet Aksoz, Salim Engin, and Mahir Dursun
Department of Electrical and Electronic Engineering, Faculty of Technology, Gazi University, Turkey
Email: ahmetaksoz@gazi.edu.tr, salimengin16@gmail.com, mdursun@gazi.edu.tr

***Abstract*—This paper proposes a remote control system based on a user and humanoid robot via Bluetooth. A user can control the robot using an android interface and each part of robot can be moved independently around the robot in a remote location. Providing motor position change in a mechanical system and automatic controlling of the data from the measuring instrument reduce process time and reduce loss of labor. The automatic controlling of the data from the measuring instrument is supplied with microprocessor. At the same time, it has been studied how to do data transfer is made via bluetooth module using the android application and how it is used the incoming data for servo motors control on microprocessor in detail.**

***Index Terms*—remote control, android control application, humanoid robot, control circuit**

I. Introduction

Remote Control and monitoring techniques are so important for developing world. A person can manage his or her farm away from miles. Thus, he or she reduce energy losses and unnecessary costs. The most important point of these adventages is preventing waste of time [1]. Although severeal equipments connect to devices via wires, wireless equipments are offered for lots of advatages. These advantages are independent work space, no cable charge and not affecting by environmental conditions [2].

Wireless communication technology also increases space to move and reduces distance is between controller and the controlled system. Bluetooth is a kind of wireless communication technonlogy, is cheaper and more useful than other wireless communication technologies [3].

System offers a new approach to control home appliances from a remote terminal, with an option from a local server, using the intemet and radio connection. The system is accomplished by personal computers, interface cards, radio transmitters and receivers, microprocessors, ac phase control circuits, along with window-type software and microprocessor control software. The system is designed to control home appliances' on/off, to regulate their output power, and to set their usage timing. The prototype of this system was tested and responded successfully, which verifies the feasibility of this system's theory and concept [4].

While some robots are controlled by connecting to the internet with servers remotely with the introduction of Social Network Services (SNS) and similar other services, the popularization of mobile devices such as smartphones and tablets, have been on the increase. These services are developed by Information Communication Technology (ICT) Software engineers [5].

Phase one comprised of the development of a 6 DoF left anthropomorphic arm and left exo-frame. Second phase is illustrated the development of the right arm, right exo-frame, torso, backbone, human machine interface and omni-directional locomotion system. Dexto:Eka: will be able to communicate with a remote user through Wi-Fi. An exo-frame capacitates it to emulate human arms and its locomotion is controlled by joystick. A Graphical User Interface monitors and helps in controlling the system [6].

Independent move command is necessary for robots like humans. A human take some commands from other humans or from reflexes, though some commands are created by itself. The humanoid robot can be managed from C# commands. C# commands are transmit to microprocessor. These commands are translated to machine languages. Then motors move the humanoid robot according to microprocessor code.

II. Circuit Schema and Microprocessor Code

16F877 microprocessor library is defined below:

```
#include <16F877.H>
#fuses XT, NOWDT, NOPROTECT, NOBROWNOUT, NOLVP, NOPUT, NOWRT, NODEBUG, NOCPD
#use delay(CLOCK=4000000)
#use rs232(baud=9600, xmit=PIN_C6, rcv=PIN_C7, parity=N, STOP=1)
#use fast_io(b)
```

Pin_C6 and Pin_C7 is actived for communicating with a Bluetooth module. Pin_B is set an output for servo motor using.

```
Byte data;
int x, time, time1;
```

Manuscript received March 1, 2015; revised June 15, 2015.

doi: 10.18178/joace.4.3.225-228

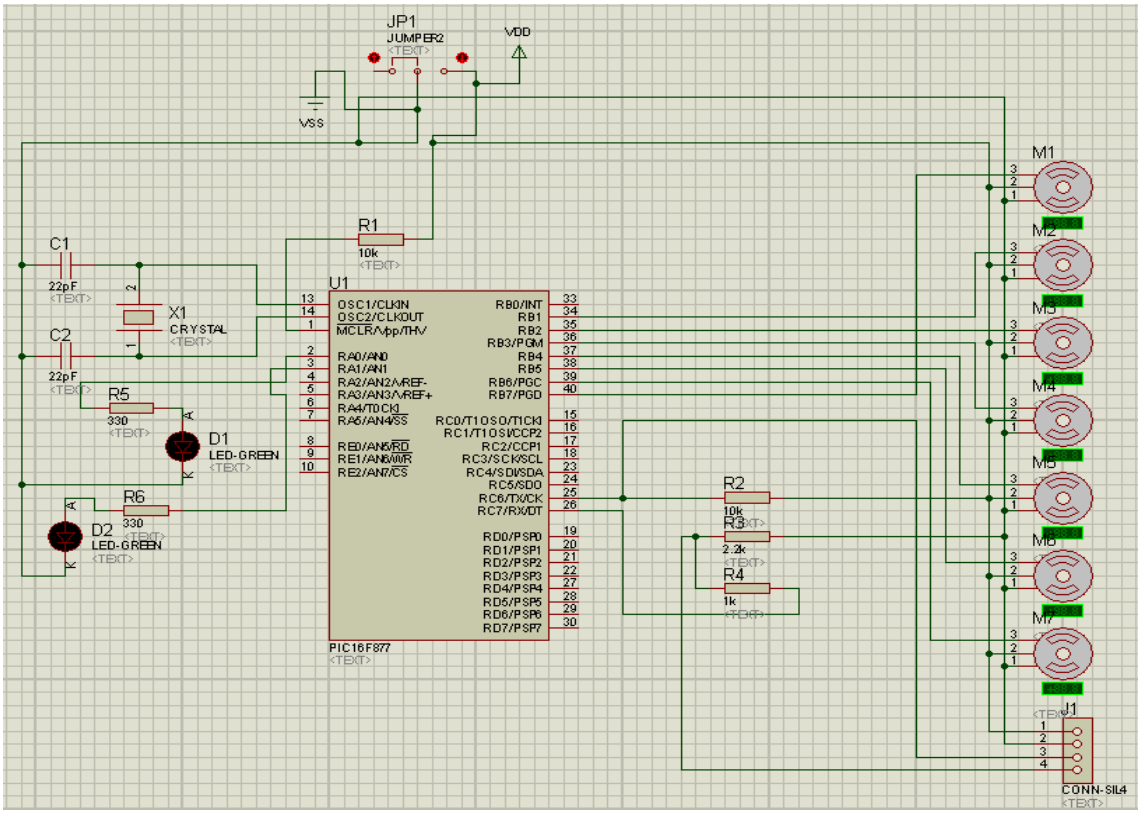

Figure 1. Servo motor control circuit with bluetooh module

"Data" is called a byte variable is defined above and incoming data on this variables via Bluetooth appoint to the “data” variable. Integer variables are defined. “x” variable is defined for “for loop”. “time” and “time1” variables are defined for square wave generation time in servo motor. Fig. 1 shows circuit schema of control circuit on circuit designer programme.

```
    setup_psp(PSP_DISABLED);
    setup_adc_ports(NO_ANALOGS);
    setup_adc(ADC_OFF);//
    setup_psp(PSP_DISABLED);
    setup_spi(SPI_SS_DISABLED);
    setup_timer_0(RTCC_INTERNAL|RTCC_DIV_1);
    setup_timer_1(T1_DISABLED);//
    setup_timer_2(T2_DISABLED,0,1);
    setup_CCP1(CCP_OFF);  setup_CCP2(CCP_OFF);
    set_tris_b(0x00);  output_b(0x00);  set_tris_a(0x00);
    output_a(0x00);
  for(i=0;i<3;i++)
  {         output_high(pin_a0);    delay_ms(500);
        output_low(pin_a0);    delay_ms(500);
  }
        output_high(pin_a0);
        delay_ms(500);
```

Microprocessor general settings are defined in this part. All output also reseted. Led which connected a0 pins was provided three times flashing with “for” loop and a 500 ms interval to understand that the system is working.

```
  data = getch();
    if (data == 'k')
    {  output_high(pin_a1);  delay_ms(60);
       data = getch();
       if (data == '1')
       { time = 4; time1 = 16;
       }
       else if (data == '2')
       { time = 1; time1 = 19;
       }
       for (x = 0; x < 1; x++)
       {
          output_high(PIN_b0);
          delay_ms(zaman);
          output_low(PIN_b0);
          delay_ms(zaman1);
       }
       output_low(pin_a1);
    }
```

Above, it can be checked coming and sending data is avaible from Bluetooth using the “getch()” command. Because, the program expects on the “getch()” command until Bluetooth data coming. For this program, if the coming data is ‘k’, servo motor in head of humanoid robot is active and can take next coming command. When ‘k’ data comes, the program waits 50ms and runs on taking codes with a view to assign to variable. If new coming data is ‘1’, head of the humanoid robot turns 30 degree to right. On the contrary coming data is ‘2’, head of the humanoid robot turns 30 degree to left. These angle

values can be set with a square wave of 20 milliseconds have created, in milliseconds using previously defined "time" and "time1" variables. Above program codes show the right arm and the left arm movements are defined like that. HC-06 Bluetooth module can be used for communication. One of the most important reasons of using of this module is that it provides duplex data communication.

III. HC-06 Bluetooth Module

HC-06 Bluetooth-Serial Module, is designed for Bluetooth SSP (Serial Port Standart) application and wireless serial communication applications. Device circuit design supplies necessary pins are reachable easily. These pins provide rapid prototyping, using easily together microprocessor, breadboard, Arduino and many circuits This card supports Bluetooth 2.0, allows to make communication in 2.4GHz frequency and has communication distance is approximately 10 meters in open field. In a word, it can be used in many projects. Features of cards are given below [7];

- Bluetooth Protocol: Bluetooth 2.0 + EDR (Enhanced Data Rate)
- 2.4GHz Communication Frequency
- Sensitivity: ≤-80 dBm
- Output Power: ≤ + 4 dBm
- Asynchronous Speed: 2.1 Mbps / 160 kbps
- Synchronous Speed: 1 Mbps / 1 Mbps
- Security: Authentication and Encryption
- Operating Voltage: 1.8-3.6V (3.3V Recommended)
- Current: 50 mA
- Dimensions: 43x16x7mm

IV. Android Application

If the humanoid robot's servo motors control, control comments are necessary. Here, Android application used for creating command. For application design five label, six button, one list picker, one bluetooth client and two clock used. It can be shown Fig. 2. The prototype pictures of humanoid robot for testing illustrate with Fig. 3 and also block code and simple algorithm of application illustrates with Fig. 4.

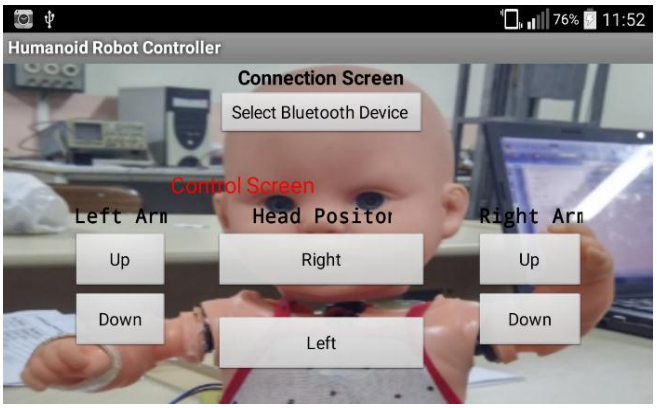

Figure 2. Android application of humanoid robot on android device

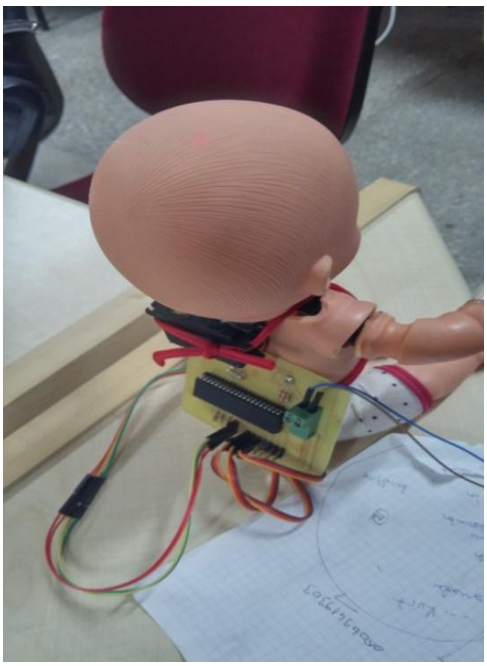

Figure 3. The prototype pictures of humanoid robot

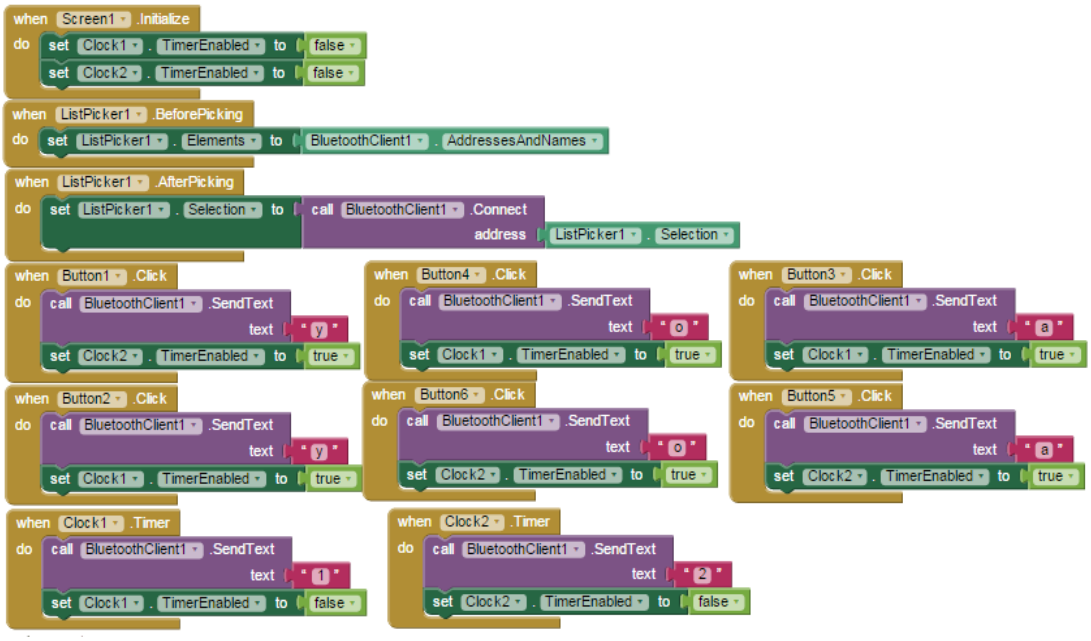

Figure 4. Block code and simple algorithm of application

V. Conclusion

A humanoid robot is controlled with an android application using Bluetooth communication. Whereby they supply remote control and command are whatever microprocessor do, whenever want to move and wherever work space of servo motors allow. However each servo motor of humanoid robot can moved independently owing to the android application. For developing this project, Humanoid robot can walk, stand up or serving anything (especially elder people).

References

[1] M. Dursun, A. Aksoz, and A. Saygin, "A HPA application for greenhouse temperature control system," in *Proc. Advances in Environmental and Agricultural Science*, Dubai, 2015, pp. 77-82.

[2] M. Dursun and S. Ozden, "A wireless application of drip irrigation automation supported by soil moisture sensors," *Scientific Research and Essays*, vol. 6, no. 7, pp. 1573-1582, 2011.

[3] A. Aksoz and A. Saygin, "Android mobile device based automation system," in *Proc. 8th The IIER-Science Plus International Conference*, Dubai, UAE, 2015, pp. 19-25.

[4] J. Y. Chen, J. T. Kuan, F. L. Wen, and S. J. Lin, "A remote control system for home appliances using the Internet and radio connection," in *Proc. IEEE International Symposium on Computer Aided Control Systems Design*, Taiwan, September 24, 2004.

[5] O. Ohashi, E. Ochiai, and Y. Kato, "A remote control method for mobile robots using game engines," in *Proc. 28th International Conference on Advanced Information Networking and Applications Workshops*, 2014.

[6] S. Kumra, M. Mohan, S. Gupta, and H. Vaswani, "Design and development part 2 of Dexto: Eka: The humanoid robot," in *Proc. IEEE International Conference on Mechatronics and Automation*, 2013.

[7] HC Serial Bluetooth Products, User Instructional Manual. [Online]. Available: http://www.rcscomponents.kiev.ua/datasheets/hc_hc-05-user-instructions-bluetooth.pdf

Ahmet Aksöz was born in 1991, Trabzon, Turkey. He received the BS degree in 2013 from Department of Mechatronics Engineering and double major degree from Department of Mechanic Engineering in Erciyes University, Kayseri, Turkey. He works and continue PhD education at Gazi University, as research assistant. His PhD's subject is "Design of EMI Filter and Modelling of EMC for Aerospace and Airplane". His research interests include electromagnetic fields, EMC/EMI, robotic systems, material in airplane industries, and analysis of electronics and mechanics systems, mechatronics, mechanic designing, automation application, visual programming, motor control and controllers.

Salim Engin was born in 1989, Bursa, Turkey. He received the BS degree in 2013, who won MSc degree in 2013 from Gazi University, Ankara, Turkey. Thesis research is Group Controls of Servo Motors by Profibus and Deadbeat.. His research interests include, C#, SQL, Asp.NET, PLC, motor control, microprocessors and microcontroller programming.

Mahir Dursun was born in 1970, Corum, Turkey. He received the BS degree in 1993, the MSc degree in 1996, and the PhD degree 2002 from Gazi University, Ankara, Turkey. He is currently an associate professor at the Department of Electric Machinery Education, Gazi University. His research interests include, Motor Design, Modeling, Motor Control, Switched Reluctance Motors, Linear Switched Reluctance Motors, Brushless DC motors, DC-DC converters, Matrix Converters, FLC, Artificial Neural Network, Elevator motors, Motor and Centrifugal Pump Drivers, DSP, PLC, microprocessors and microcontroller programming, serial and parallel active power filters, and photovoltaic systems, photovoltaic irrigating systems, RF control and communications, and distance education material design.