Hardware Design and Simulation of Reduced-Order Extended Kalman Filter Estimator and Speed Fuzzy Controller for Sensorless PMSM Drives

Nguyen Vu Quynh and Ying-Shieh Kung
Electrical Department of Southern Taiwan University of Science and Technology, Tainan, Taiwan
Corresponding author
Email: vuquynh@lhu.edu.vn

Chung-Chun Huang and Liang-Chiao Huang
Green Energy and Environment Research Laboratories, Industrial Technology Research Institute, Hsinchu, Taiwan
Email: kung@mail.stust.edu.tw, {CCHuang, liangqiao}@itri.org.tw

***Abstract*—The design and co-simulation of a sensorless control for permanent magnet synchronous motor (PMSM) drive is presented in this paper. Firstly, the block diagram of vector control and fuzzy algorithm are designed. Secondly, a flux position and speed of rotor are estimated through the reduced-order extended kalman filter (EKF). Thirdly, the very-high-speed IC hardware description language (VHDL) is adopted to describe the behavior of all functions of the system. Fourthly, the simulation work is performed by MATLAB/Simulink and ModelSim co-simulation mode. The PMSM, inverter and speed command are performed in Simulink and the sensorless speed control of PMSM drive is executed in ModelSim. Finally, the comparison results between PI and Fuzzy controller validate the effectiveness of the sensorless PMSM speed control system. It has fast reacting speed and good dynamic performance.**

***Index Terms*—simulink/modelsim co-simulation, reduced-order extended kalman filter, sensorless speed control; fuzzy controller; VHDl**

I. Introduction

The conventional motor control needs a speed sensor or an optical encoder to measure the rotor velocity and feedback it to the controller for ensuring the precision speed control. However, sensor presents some disadvantages such as drive cost, machine size, reliability and noise immunity; therefore, a sensorless control without position and speed sensors for PMSM drive become a popular research topic in literature [1]-[4]. Those sensorless control strategies have sliding mode observer (SMO), extended Kalman filter (EKF) etc. The EKF requires heavy on-line matrix computing for a fix-pointed processor system. In realization, a fix-pointed processor using digital signal processor (DSP) or field programmable gate array (FPGA) both can provide a solution in this issue. Especially, FPGA is better for the implementation of the digital system than DSP [3].

In this paper, a co-simulation is applied to sensorless speed control for PMSM drive and shown in Fig.1. The reduced-order EKF is used to estimates the rotor flux angle and velocity. Then, the vector control is for the transformation between *abc*-axis to the *dq*-axis. The estimated rotor flux angle is supplied to vector control for park's and invert park's transformation. After transformation, the i_d is controlled to 0 so the PMSM will be decoupled and controlling a PMSM is like controlling a DC motor. The fuzzy controller (FC) is applied for controlling the velocity of PMSM. The FC herein uses singleton fuzzifier, triangular membership function, product-inference rule and central average defuzzifier method.

II. Design of PMSM Drive and Sensorless Speed Controller

A. Mathematical Model of PMSM

The typical mathematical model of a PMSM

$$\frac{di_d}{dt} = -\frac{r_s}{L_d} i_d + \omega_e \frac{L_q}{L_d} i_q + \frac{1}{L_d} \mathrm{v}_d \tag{1}$$

$$\frac{di_q}{dt} = -\omega_e \frac{L_d}{L_q} i_d - \frac{r_s}{L_q} i_q - \omega_e \frac{\lambda_f}{L_q} + \frac{1}{L_q} v_q \tag{2}$$

where v_d, v_q are the d and q axis voltages; i_d, i_q, are the d and q axis currents, r_s is the phase winding resistance; L_d, L_q are the d and q axis inductance; ω_e is the rotating speed of magnet flux; λ_f is the permanent magnet flux linkage

Manuscript received November 21, 2012; revised January 29, 2013.

doi: 10.12720/joace.1.3.245-249

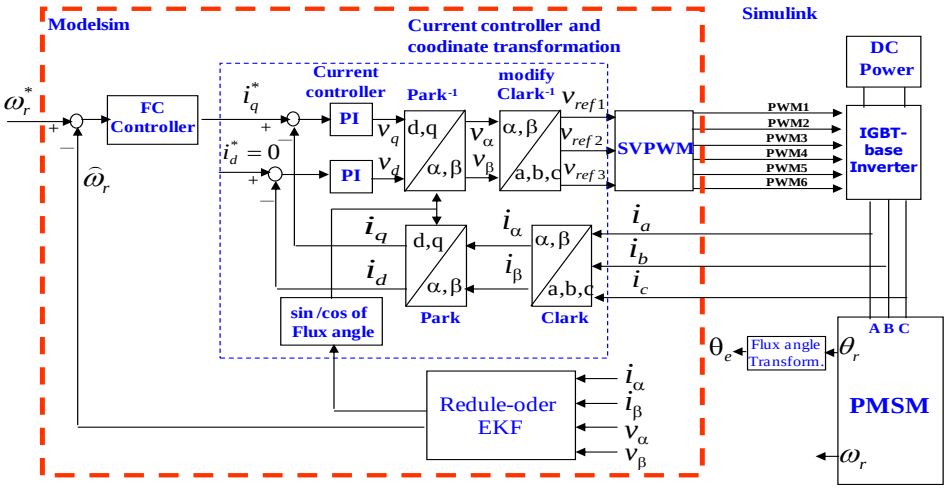

Figure 1. Block diagram of the proposed sensorless PMSM drive system

B. Extended kalman Filter Algorithm

The EKF algorithm is described by the following two steps recursive equations [4]. With $x(t)$, $u(t)$, $y(t)$ are system state, system input and system output, respectively. The $\sigma(t)$ and $\mu(t)$ represent system noise and measurement noise which are zero-mean white Gaussian distribution with covariance $Q(t)$ and $R(t)$ respectively.

Step 1: (Prediction step)

$$\hat{x}_{n|n-1} = \hat{x}_{n-1} + (f[\hat{x}_{n-1}] + B \cdot u_{n-1})T_c \tag{3}$$

The covariance is updated by

$$P_{n|n-1} = \Phi_{n-1} P_{n-1} \Phi_{n-1}^T + Q_d \tag{4}$$

Step 2: (Innovation step)

$$\hat{x}_n = \hat{x}_{n|n-1} + K_n (y_n - H\hat{x}_{n|n-1}) \tag{5}$$

$$P_n = P_{n|n-1} - K_n H P_{n|n-1} \tag{6}$$

The Kalman gain is calculated by

$$K_n = P_{n|n-1} H^T [H P_{n|n-1} H^T + R]^{-1} \tag{7}$$

C. Design of the Reduced-order EKF in Sensorless PMSM

The circuit equation of PMSM on the $\alpha - \beta$ fixed coordinate can be derived by the following equation

$$\begin{bmatrix} v_\alpha \\ v_\beta \end{bmatrix} = \begin{bmatrix} r_s + sL_s & 0 \\ 0 & r_s + sL_s \end{bmatrix} \begin{bmatrix} i_\alpha \\ i_\beta \end{bmatrix} + \omega_e \lambda_f \begin{bmatrix} -\sin\theta_e \\ \cos\theta_e \end{bmatrix} \tag{8}$$

where $L_s \triangleq L_d = L_q$, $[v_\alpha \; v_\beta]^T$ is voltage on fixed coordinate; $[i_\alpha \; i_\beta]^T$ is current on fixed coordinate; θ_e is angular position at magnet flux; s is differential operator.

EMF is defined as

$$e = \begin{bmatrix} e_\alpha \\ e_\beta \end{bmatrix} \triangleq \omega_e \lambda_f \begin{bmatrix} -\sin\theta_e \\ \cos\theta_e \end{bmatrix} \tag{9}$$

The EMF includes the information of rotor position angle and angular velocity from the flux; therefore, it can be instead of current and taken as the system state in reduced-order EKF. First, we respectively redefine the system input and system output in PMSM model as follows,

$$x(t) = \begin{bmatrix} z_\alpha \\ z_\beta \\ \omega_e \end{bmatrix} = \begin{bmatrix} \frac{T_c}{L_s} e_\alpha \\ \frac{T_c}{L_s} e_\beta \\ \omega_e \end{bmatrix} \quad \text{and} \quad y(t) = \begin{bmatrix} z_\alpha \\ z_\beta \end{bmatrix} = \begin{bmatrix} \frac{T_c}{L_s} e_\alpha \\ \frac{T_c}{L_s} e_\beta \end{bmatrix} \tag{10}$$

and assume that the rotor angular speed is constant at each sampling period. Then from (9)~(10), the state equation of PMSM stochastic model can be straightly obtained by

$$\begin{bmatrix} \dot{z}_\alpha \\ \dot{z}_\beta \\ \dot{\omega}_e \end{bmatrix} = \begin{bmatrix} -\omega_e z_\beta \\ \omega_e z_\alpha \\ 0 \end{bmatrix} + \sigma(t) \quad \text{and} \quad \begin{bmatrix} z_\alpha \\ z_\beta \end{bmatrix} = \begin{bmatrix} z_\alpha \\ z_\beta \end{bmatrix} + \mu(t) \tag{11}$$

The Jacobian matrices can be expressed as:

$$F(x(t)) = \left.\frac{\partial f}{\partial x}\right|_{x=x(t)} = \begin{bmatrix} 0 & -\omega_e & -z_\beta \\ \omega_e & 0 & z_\alpha \\ 0 & 0 & 0 \end{bmatrix}$$
$$H(x(t)) = \left.\frac{\partial h}{\partial x}\right|_{x=x(t)} = \begin{bmatrix} 1 & 0 & 0 \\ 0 & 1 & 0 \end{bmatrix} \tag{12}$$

The simplified exponential matrix can be:

$$\Phi(t_n, t_{n-1}, x(t_{n-1}) \cong I + FT_c$$
$$= \begin{bmatrix} 1 & -\omega_e T_c & -z_\beta T_c \\ \omega_e T_c & 1 & z_\alpha T_c \\ 0 & 0 & 1 \end{bmatrix} \triangleq \begin{bmatrix} 1 & \phi_{12} & \phi_{13} \\ \phi_{21} & 1 & \phi_{23} \\ 0 & 0 & 1 \end{bmatrix} \tag{13}$$

where $\phi_{12} = -\omega_e T_c$, $\phi_{21} = \omega_e T_c$, $\phi_{13} = -z_\beta T_c$ and $\phi_{23} = z_\alpha T_c$. Further, due to the PMSM stochastic model in (11) has not input signals and the states of z_α and z_β (e_α and e_β)

cannot be directly observed, the EKF algorithm cannot be applied. Considering (8)~(9), e_α and e_β can be indirectly calculated by the discrete model:

$$\begin{bmatrix} z_\alpha(n) \\ z_\beta(n) \end{bmatrix} = -\begin{bmatrix} i_\alpha(n+1) \\ i_\beta(n+1) \end{bmatrix} + \begin{bmatrix} 1-\frac{r_s}{L_s}T_c & 0 \\ 0 & 1-\frac{r_s}{L_s}T_c \end{bmatrix}\begin{bmatrix} i_\alpha(n) \\ i_\beta(n) \end{bmatrix} + \begin{bmatrix} \frac{T_c}{L_s} & 0 \\ 0 & \frac{T_c}{L_s} \end{bmatrix}\begin{bmatrix} v_\alpha(n) \\ v_\beta(n) \end{bmatrix} \quad (14)$$

However, it is not a causal system because $i_\alpha(n+1)$ and $i_\beta(n+1)$ cannot be measured at sampling instant time n. To solve this problem, we assume that the current is constant at each sampling period, and the (14) can be further simplified as

$$\begin{bmatrix} z_\alpha(n) \\ z_\beta(n) \end{bmatrix} = -\begin{bmatrix} \frac{r_s}{L_s}T_c & 0 \\ 0 & \frac{r_s}{L_s}T_c \end{bmatrix}\begin{bmatrix} i_\alpha(n) \\ i_\beta(n) \end{bmatrix} + \begin{bmatrix} \frac{T_c}{L_s} & 0 \\ 0 & \frac{T_c}{L_s} \end{bmatrix}\begin{bmatrix} v_\alpha(n) \\ v_\beta(n) \end{bmatrix} \quad (15)$$

The EKF algorithm in (3)~(7) can be carried out to estimate the state value. The initial values of Q_d, R and P_0 need to be chosen. Through the recursive calculation, the state value of $\hat{x}(n) = [\hat{z}_\alpha(n), \hat{z}_\beta(n), \hat{\omega}_e(n)]^T$ is estimated at each sampling period, then the rotor angular speed and rotor position can be respectively derived by

$$\hat{\omega}_r(n) = \frac{\hat{\omega}_e(n)}{N_P} \text{ and } \hat{\theta}_e(n) = \tan^{-1}\left(\frac{-\hat{z}_\alpha(n)}{\hat{z}_\beta(n)}\right) \quad (16)$$

Finally, a summary for estimating the rotor position and rotor velocity based on reduced-order EKF is shown by the following design procedures:

Step 1: Set the initial values of Q_d, R and P_0

Step 2: Calculate the $z_\alpha(n)$, $z_\beta(n)$ from (15).

Step 3: Estimate the temporary state variables (3)

$$\begin{aligned} \hat{z}_\alpha(n|n-1) &= \hat{z}_\alpha(n-1) - \hat{\omega}_e(n-1)T_C\hat{z}_\beta(n-1) \\ \hat{z}_\beta(n|n-1) &= \hat{z}_\beta(n-1) + \hat{\omega}_e(n-1)T_C\hat{z}_\alpha(n-1) \\ \hat{\omega}_e(n|n-1) &= \hat{\omega}_e(n-1) \end{aligned} \quad (17)$$

Step 4: Obtain the temporary covariance matrix (4)

Step 5: Calculate the Kalman gain from (7)

Step 6: Tune the present state variables (5)

$$\begin{aligned} \hat{z}_\alpha(n) &= \hat{z}_\alpha(n|n-1) + k_{11}\tilde{z}_\alpha(n) + k_{12}\tilde{z}_\beta(n) \\ \hat{z}_\beta(n) &= \hat{z}_\beta(n|n-1) + k_{21}\tilde{z}_\alpha(n) + k_{22}\tilde{z}_\beta(n) \\ \hat{\omega}_e(n) &= \hat{\omega}_e(n|n-1) + k_{31}\tilde{z}_\alpha(n) + k_{32}\tilde{z}_\beta(n) \end{aligned} \quad (18)$$

With $\tilde{z}_\alpha(n) = z_\alpha(n) - \hat{z}_\alpha(n|n-1)$; $\tilde{z}_\beta(n) = z_\beta(n) - \hat{z}_\beta(n|n-1)$

where k_{ij} is the element of Kalman gain K_n.

Step 7: Update the present covariance matrix P_n (6).

Step 8: Calculate the rotor angular speed and rotor flux position from (16); back to Step 2.

D. Fuzzy Controller

The input linguist value for fuzzy are the tracking error e and the error change de

$$\begin{aligned} e(n) &= \omega_r^*(n) - \hat{\omega}_r(n) \\ de(n) &= e(n) - e(n-1) \end{aligned} \quad (19)$$

The design of the FC is as follows:

1) Take e and de as the input variable of FC and define their linguist values E and dE in Fig.2 by $\{A_0, A_1, A_2, A_3, A_4, A_5, A_6\}$ and $\{B_0, B_1, B_2, B_3, B_4, B_5, B_6\}$.
2) Only two linguistic values are excited and gave a non-zero membership in any input value (Fig.2), and the membership degree $\mu_{A_i(e)}$ can be obtained. The error e is located between e_i and e_{i+1}, two linguist values of A_i and A_{i+1} are excited, and the membership degree is derived by

$$\mu_{A_i}(e) = \frac{e_{i+1} - e}{2} \text{ and } \mu_{A_{i+1}}(e) = 1 - \mu_{A_i}(e) \quad (20)$$

where $e_{i+1} \triangleq -6 + 2*(i+1)$. The membership degree $\mu_{B_j(de)}$ can be obtained in similar method.

3) Select the 49 initial fuzzy control rules

$$IF\ e\ is\ A_i\ and\ \Delta e\ is\ B_j\ THEN\ u_f\ is\ c_{j,i} \quad (21)$$

where i,j = 0~6, A_i and B_j are fuzzy number, $c_{j,i}$ is real number and u_f is fuzzy output.

4) The equation (21) can be replaced by the following expression:

$$u_f(e,de) = \frac{\sum_{n=i}^{i+1}\sum_{m=j}^{j+1} c_{m,n}[\mu_{A_n}(e) * \mu_{B_m}(de)]}{\sum_{n=i}^{i+1}\sum_{m=j}^{j+1} \mu_{A_n}(e) * \mu_{B_m}(de)} \triangleq \sum_{n=i}^{i+1}\sum_{m=j}^{j+1} c_{m,n} * d_{n,m} \quad (22)$$

where $d_{n,m} \triangleq \mu_{A_n}(e) * \mu_{B_m}(de)$. And those $c_{m,n}$ display the value of the singleton fuzzier.

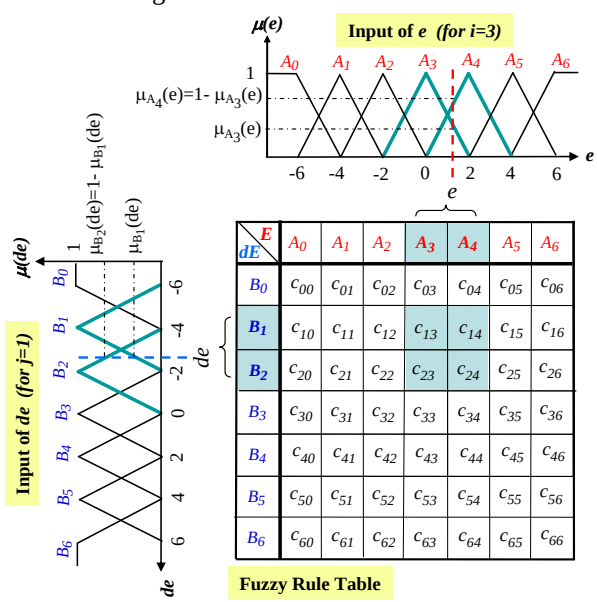

dE \ E	A_0	A_1	A_2	A_3	A_4	A_5	A_6
B_0	c_{00}	c_{01}	c_{02}	c_{03}	c_{04}	c_{05}	c_{06}
B_1	c_{10}	c_{11}	c_{12}	c_{13}	c_{14}	c_{15}	c_{16}
B_2	c_{20}	c_{21}	c_{22}	c_{23}	c_{24}	c_{25}	c_{26}
B_3	c_{30}	c_{31}	c_{32}	c_{33}	c_{34}	c_{35}	c_{36}
B_4	c_{40}	c_{41}	c_{42}	c_{43}	c_{44}	c_{45}	c_{46}
B_5	c_{50}	c_{51}	c_{52}	c_{53}	c_{54}	c_{55}	c_{56}
B_6	c_{60}	c_{61}	c_{62}	c_{63}	c_{64}	c_{65}	c_{66}

Figure 2. The design of FC

III. SIMULINK/MODELSIM CO-SIMULATION MODEL AND SIMULATION RESULTS

A. Simulink/Modelsim Co-simulation Model

The sensorless speed controller is executed in ModelSim by three works. The work-1 to work-3 of ModelSim (Fig. 3) respectively performs the function of speed estimation and speed loop FC; the function of current controller and coordinate transformation (CCCT) and SVPWM; The function of reduced-order EKF. All works in ModelSim are described by VHDL. In Fig. 4, the steps s_0 to s_8 calculate the output value, Jacobian matrix and predict state variable; steps s_9 to s_{39} compute the covariance matrix; steps s_{40} to s_{41} are for state error calculation; steps s_{42} to s_{79} update the present covariance matrix P_n and calculate the Kalman gain K_n; steps s_{80} to s_{86} tune the present state; and steps s_{87} to s_{110} compute the rotor flux position and rotor speed. The *RS,2* represents the right shift function with two bits. The operation of each step in Fig. 4 is 40ns; therefore total 111 steps only need 4.44μs operation time. Due to the limited space, the description of temporary and present covariance matrix and Kalman gain in Fig. 4 have not shown here. In Fig. 3 the fuzzy speed controller in work-1 and the circuit design of CCCT and SVPWM in work-2 of ModelSim are also not shown here. The FPGA (Altera) resource usages of work-1 to work-3 of ModelSim in Fig. 3 are 2,043 LEs (Logic Elements) and 0RAM bits, 2,085 LEs and 24,576 RAM bits, 1,151LEs and 49,152 RAM bits, and 3,425 LEs and 49,152 RAM bits, respectively

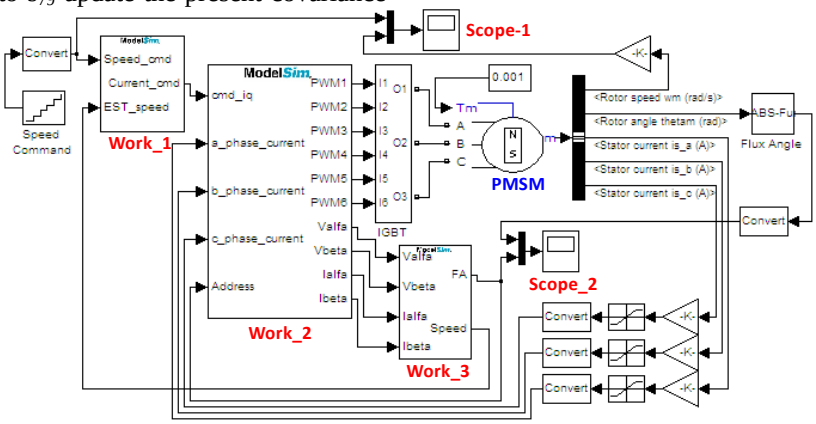

Figure 3. Simulink/Modelsim co-simulation architecture for the proposed sensorless PMSM drives

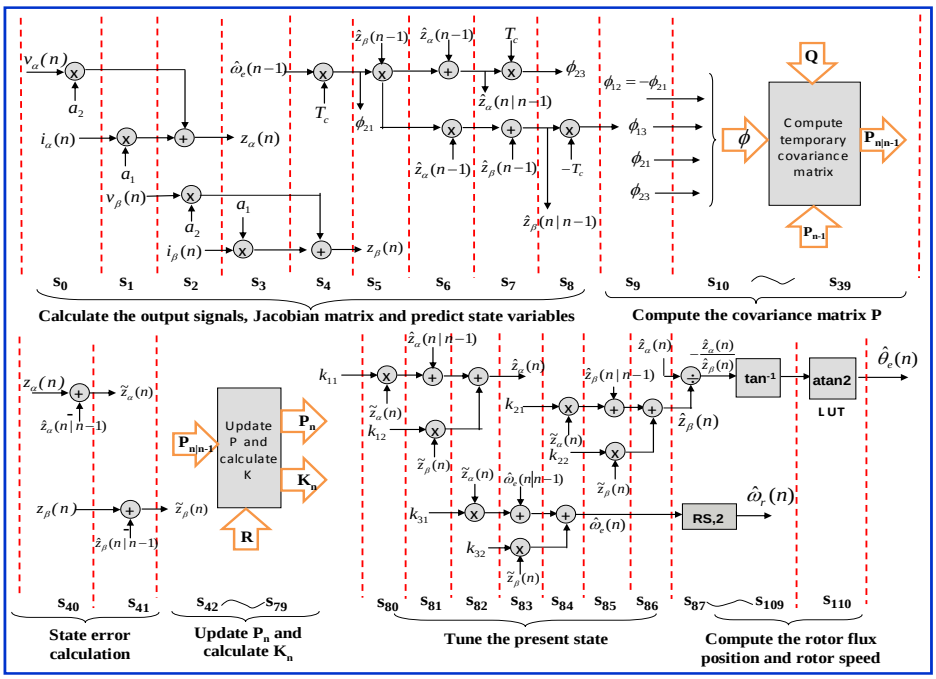

Figure 4. Hardware design for reduced-order EKF

B. Simulation Results

In Fig. 3, the PMSM and the inverter are executed by SimPowerSystem blockset. The ModelSim executes the co-simulation using VHDL code running inside ModelSim program. The PMSM parameters are 4 pole pairs, r_s =1.3Ω, L_s=6.3mH, inertia J=0.000108 kg*m^2 and friction factor F=0.0013 N*m*s. The speed command is set from 500rpm to 2500 rpm for testing. The results of the actual rotor flux angle θ_e, the estimated rotor flux angle $\hat{\theta}_e$ under different motor speed are shown in Fig. 5.

It presents that the error of the estimated rotor FA and the actual rotor FA are among 0.52%~0.88%. The results show that the reduced-order EKF algorithm apparently gives accuracy, especially in high speed condition. After confirming the effectiveness of the rotor flux position estimation, the estimated rotor FA is feed-backed to the current loop for vector control and the estimated rotor speed is feed-backed to the speed loop for speed control. The step response is tested in two different controller types, one is PI controller and another is FC; In Fig. 6a, it shows that the rotor speed using FC is faster than speed using PI controller. Especially, when the speed command decreases (Fig. 6b), the speed response is operated by PI controller which becomes worse with a little overshoot and sluggishness. Therefore, from Figs. 5~6, it demonstrates that the fuzzy sensorless control can give better speed tracking than PI sensorless control. It also present that the proposed FC can enhance the robustness in sensorless PMSM drive.

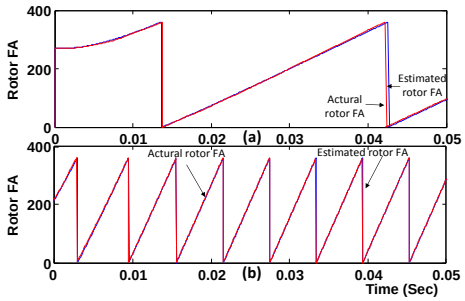

Figure 5. Rotor flux angle at (a)500rpm and (b)2500rpm

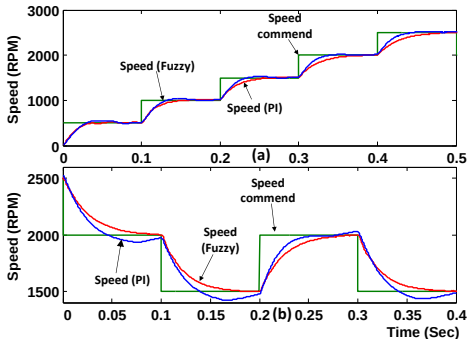

Figure 6. Comparing speed responses are got from PI and Fuzzy

IV. Conclusions

This study has been presented a fuzzy sensorless speed control for PMSM drive based on reduced-order EKF and successfully demonstrated its performance through co-simulation by using Simulink and ModelSim. In realization aspect, the VHDL is used to describe the behavior of reduced-order EKF algorithm, CCCT, FC. The FSM is used to reduce the FPGA resource usage. In the aspect of the rotor flux position estimation and rotor speed control, FC shows a good performance than PI controller.

Acknowledgment

This work was supported by the Bureau of Energy

References

[1] S. Bolognani, O. Roberto, and Z. Mauro, “On sensorless full-digital PMSM drive with EKF estimation of speed and rotor position,” *IEEE Trans. Industrial Electronic*, vol. 46, no. 1, pp.184-191, February 1999.

[2] M. C. Huang, A. J. Moses, and F. Anayi, “The comparison of sensorless estimation techniques for PMSM between extended kalman filter and flux-linkage observer,” *in Proc IEEE Applied Power Electronics Conference and Expositio*, 2006, pp. 654-659.

[3] L. Idkhajine, E. Monmasson, and A. Maalouf, “Extended kalman filter for ac drive sensorless speed controller - fpga-based solution or dsp-based solution,” in *Proc IEEE International on Industrial Electronics*, 2010, pp. 2759-2764.

[4] Y. S. Kung and N. T. Hieu, "Simulink/ModelSim co-simulation of sensorless PMSM speed controller using reduced-order extended kalman filter," in *IEEE International Symposium on Industrial Electronics*, 2012, pp. 1405-1410.

Nguyen Vu Quynh was born in Ninh Binh, Vietnam, in 1979. He received both B.S and M.S degrees in electrical engineering from University of Technical Education, Ho Chi Minh city, Vietnam, in 2003 and 2005. He is currently pursuing the Ph.D degree at Southern Taiwan University of Science and Technology, Tainan, Taiwan.
His research interests are in the areas of PMSM control, fuzzy and neural control, FPGA.

Ying-Shieh Kung was born in Taiwan, R.O.C, in 1957. He received the B.S degree inaeronautical engineering from National Cheng Kung University, Tainan, Taiwan, in 1980, the M.S degree in mechanical engineering from National Taiwan University, Taipei, Taiwan, in 1982, and the Ph.D degree in power mechanical engineering from National Tsing Hua University, Hsinchu, Taiwan, in1993.
From 1983 to 1996, he was an Engineer and focused on the research in the field of automatic control of machine system at Industrial Technology Research Institute, Hsinchu, Taiwan. Since 1996, he has been an Associate Professor in Department of Electrical Engineering, Southern Taiwan University of Science and Technology (STUST), Tainan. He is currently a Professor at STUST. His areas of research interest are controller design for ac motor drives and linear motor drives, robot control, intelligent control, and digital control using the DSP and FPGA implementations.

Chung-Chun Huang was born in Taichung, Taiwan, He has received the B.S. degree in automatic control engineering from Feng Chia University, Taichung, Taiwan, in 2005, the M.S. degree in electrical engineering from Southern Taiwan University, Tainan, Taiwan, in 2007. From 2007 until now, he is an associate researcher who focused on the research of motor control of power saving in the Green Energy and Environment Research Laboratories, Industrial Technology Research Institute (ITRI), Hsinchu, Taiwan. His areas of research interests are motor control, the application of the DSP and FPGA in motor and power control system

Liang-Chiao Huang was born in Changhua, Taiwan, He has received the B.S. and M.S. degrees in electrical engineering from National Taiwan University of Science and Technology, Taipei, Taiwan, in 2002 and 2004. From 2005 until now, he is an associate researcher who focused on the research of motor control of power saving in the Green Energy and Environment Research Laboratories, Industrial Technology Research Institute (ITRI), Hsinchu, Taiwan. His areas of research interests are PMSM motor control, the application of the DSP and FPGA in motor and digital power control system